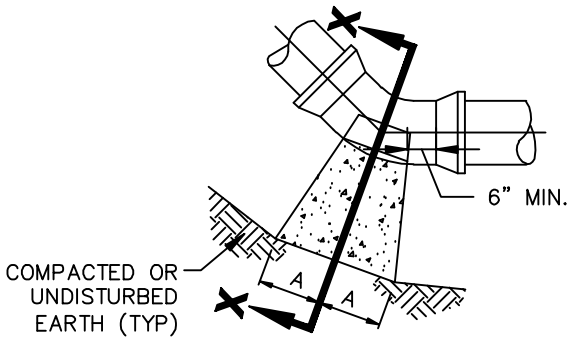

PLAN – BENDS
N.T.S.

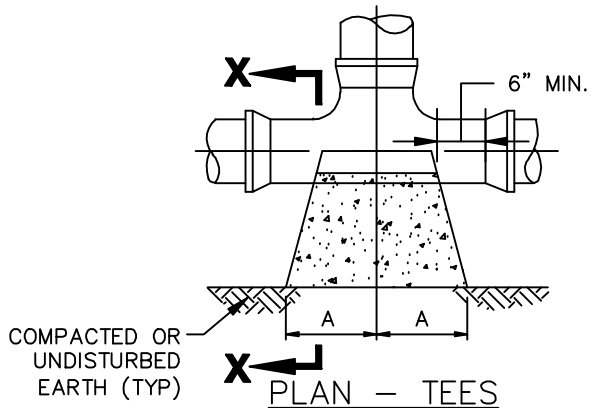

PLAN – TEES
N.T.S.

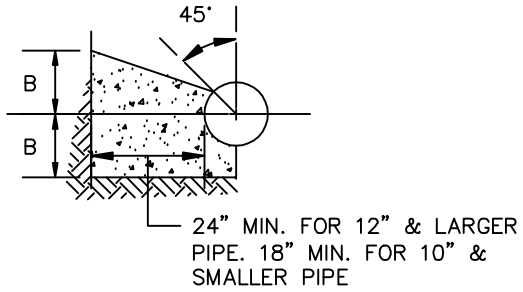

SECTION X–X
N.T.S.

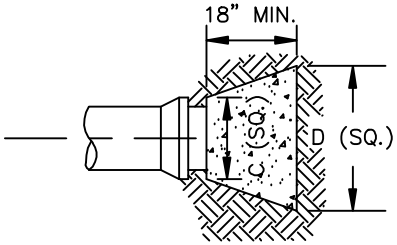

PLAN AND ELVATION – PLUGS
N.T.S.

NOTES:
1. CONCRETE BLOCKING AT PLUGS IS TO BE PLACED ONLY WHEN IDENTIFIED ON THE PLANS.

SIZE	1/4 BENDS		1/8 BENDS		1/16 BENDS		TEES		PLUGS	
	A	B	A	B	A	B	A	B	C	D
6"	16"	10"	9"	10"	6"	8"	10"	12"	10"	21"
8"	22"	13"	12"	13"	8"	10"	13"	16"	12"	29"
10"	26"	17"	14"	17"	10"	13"	16"	20"	14"	36"
12"	29"	21"	16"	21"	11"	16"	18"	24"	16"	41"
14"	35"	24"	19"	24"	12"	20"	22"	27"	18"	48"
16"	38"	27"	21"	27"	12"	24"	24"	30"	20"	54"

REVISIONS

NO.	DATE	DESCRIPTION

YORK COUNTY ENGINEERING STANDARDS

BLOCKING

PIPE SIZES 6" THROUGH 16"

STD. NO. 15.13

DATE 09/06