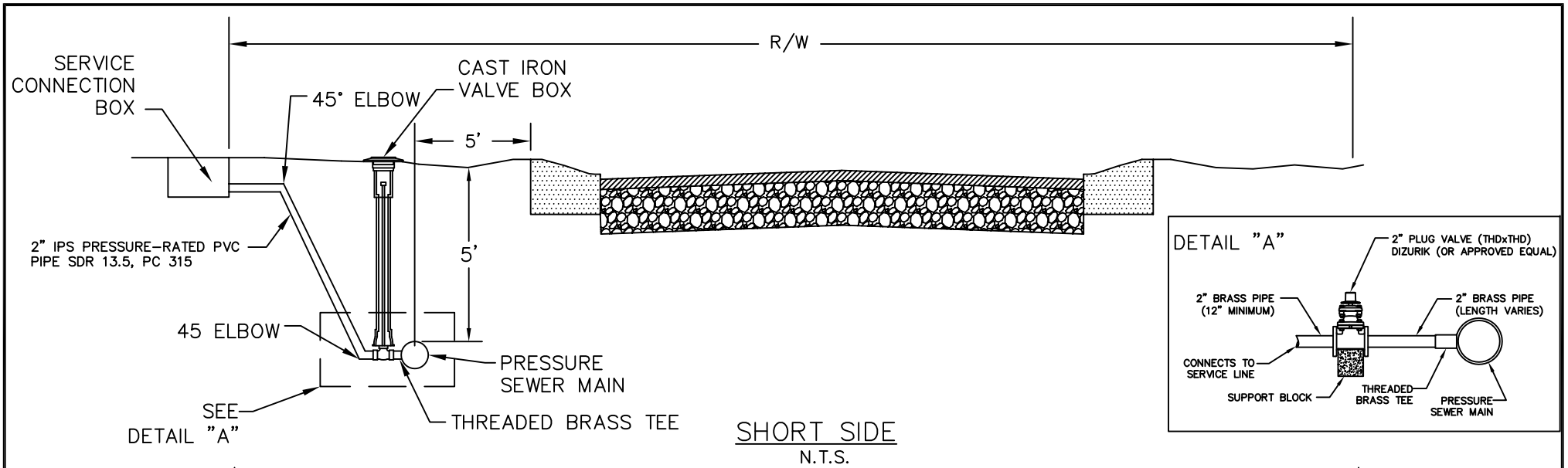

SHORT SIDE
N.T.S.

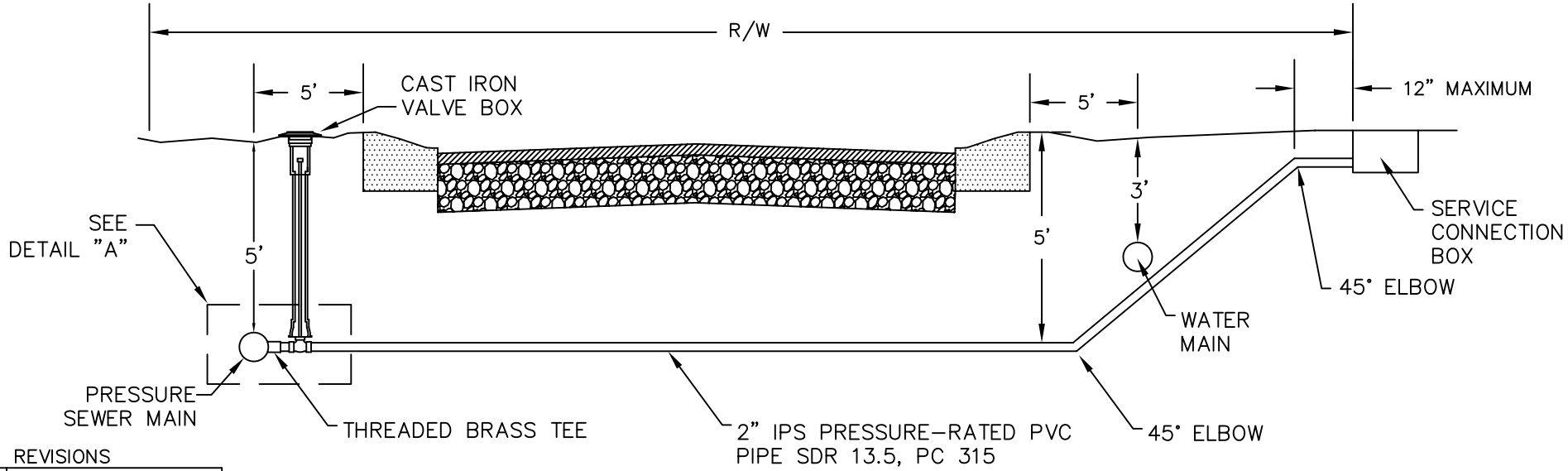

LONG SIDE
N.T.S.

REVISIONS

NO.	DATE	DESCRIPTION
1	3/12	PIPE MATERIAL, DETAIL 'A'

YORK COUNTY ENGINEERING STANDARDS

LOW-PRESSURE SEWER
LATERAL SERVICE

STD. NO. 14.02

DATE 10/06