NOTES:
1. PIPE FOR INSIDE DROP SHALL BE SDR 35 PVC CONFORMING TO ASTM SPEC. D3034
2. BOTTOM BEND TO BE 90° SHORT BEND, BELL SPIGOT, OF SDR 35 PVC. SPIGOT OF BEND TO REST DIRECTLY ON EXISTING SHELF. CONSTRUCT MASONRY THROUGH FROM DROP EFFLUENT TO MAIN CHANNEL.
3. NOTCH BELL OF PVC DROP TO ACCEPT D.I.P. SPIGOT AS SHOWN.
4. LOCATE STRAPS AT PIPE BELL AND ABOVE BELL OF 90° BEND AS SHOWN. ADD EXTRA STRAPS AS NECESSARY TO MAINTAIN MAX. SPACING OF TEN FEET.
5. HOLE IN MANHOLE WALL TO MADE WITH A CORING MACHINE. INSTALL FLEXIBLE RUBBER COUPLING.
6. CORE HOLE SHALL NOT ENTER CONE SECTION.
7. STEPS SHALL BE RELOCATED IF THEY CONFLICT WITH INSIDE DROP.
8. INSIDE DROP PIPE TO BE STRAPPED WITH 1/4"x 2" STAINLESS STEEL STRAPS WITH 2 ANCHOR BOLTS. (4' MAXIMUM SPACING BETWEEN STRAPS)
9. MANHOLE DIAMETER MUST BE MINIMUM OF 60".
10. STRAIGHT WALL OF MH TO BE LOCATED OVER INFLUENT PIPE OR OVER WIDEST SHELF.

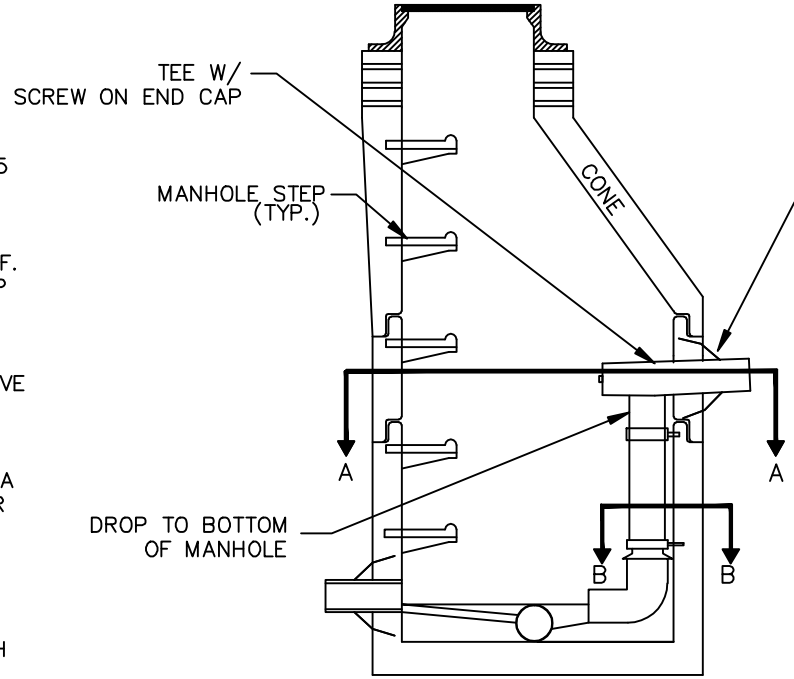


ELEVATION VIEW
N.T.S.

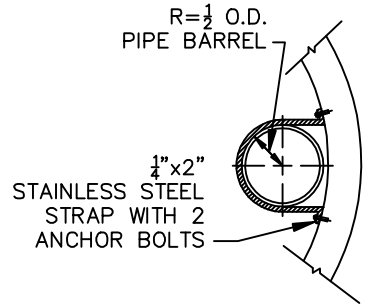


SECTION BB
N.T.S.

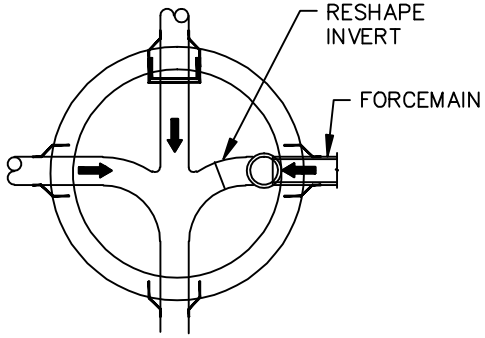


SECTION AA
N.T.S.

REVISIONS

| NO. | DATE | DESCRIPTION |
|---|---|---|
| | | |
| | | |

YORK COUNTY ENGINEERING STANDARDS

# FORCE MAIN TO GRAVITY SEWER
## INSIDE DROP DETAIL

STD. NO. 13.10
DATE 08/09