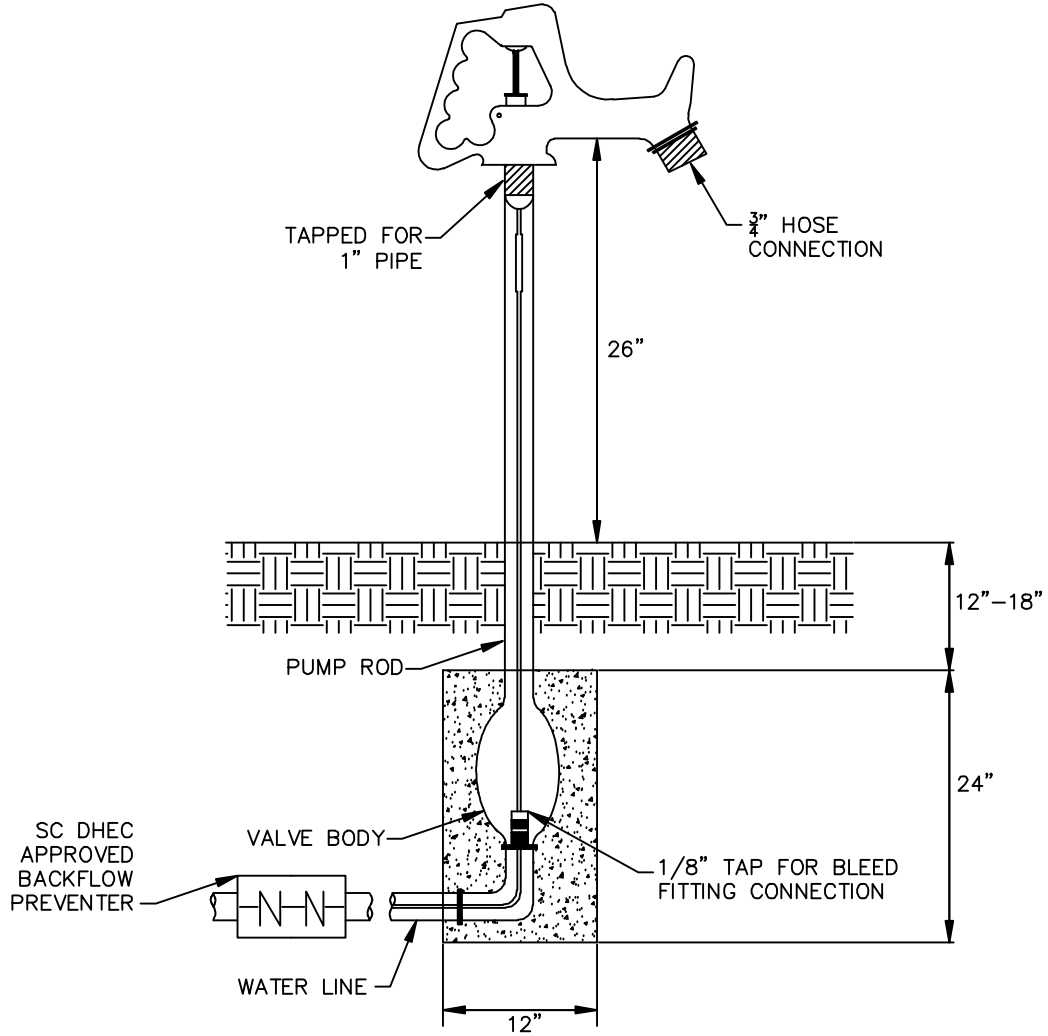

PLAN VIEW
N.T.S.

NOTES:
1. YARD HYDRANT TO BE SIMMONS 800 SERIES FREEZE PROOF OR APPROVED EQUAL

REVISIONS

NO.	DATE	DESCRIPTION
NO.	8/08	CHANGED NOTE

YORK COUNTY ENGINEERING STANDARDS

TYPICAL PUMP STATION
YARD HYDRANT

STD. NO. 13.06

DATE 08/07