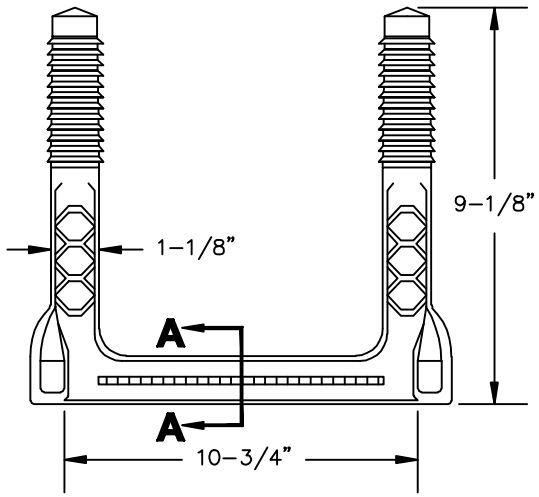


PLAN VIEW
N.T.S.

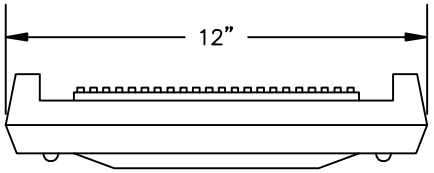


FRONT VIEW
N.T.S.

NOTE:

1. THIS STEP TO BE DRIVEN INTO TAPERED HOLES IN PRECAST MANHOLE SECTIONS. DO NOT USE AS A GROUTED–IN STEP.
2. STEP TO BE CONSTRUCTED OF COPOLYMER POLYPROPHYLENE PLASTIC.
3. 1,000 POUND PULL OUT TEST REPORT REQUIRED ON EACH STEP.

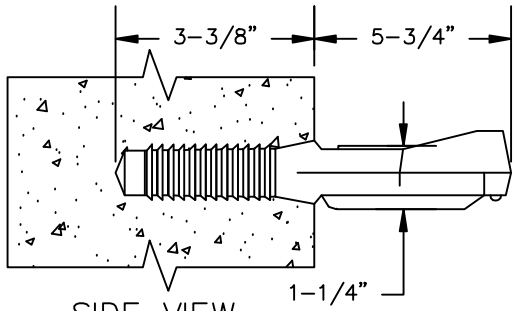


SIDE VIEW
N.T.S.

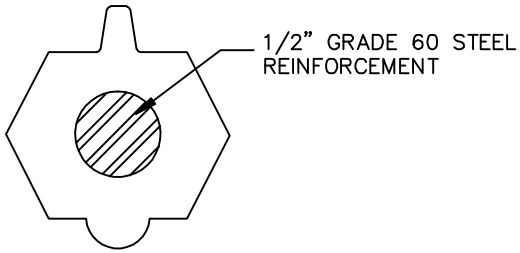


SECTION A–A

REVISIONS

| NO. | DATE | DESCRIPTION |
|---|---|---|
| | | |
| | | |

| | | |
|---|---|---|
| YORK COUNTY ENGINEERING STANDARDS | MANHOLE<br>PLASTIC STEP | STD. NO.<br>12.09<br>DATE<br>09/06 |