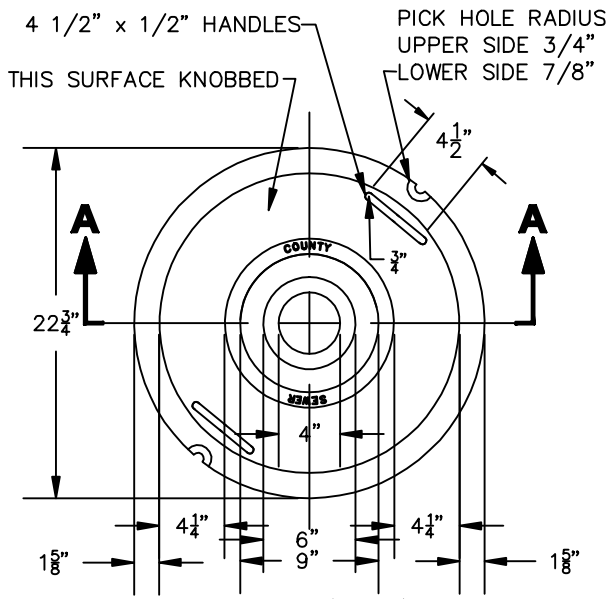

COVER (TOP)
N.T.S.

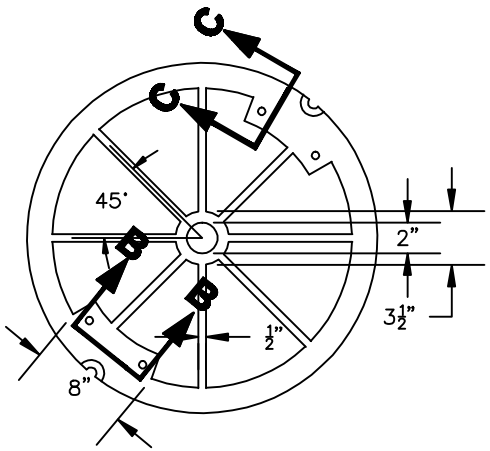

COVER (BOTTOM)
N.T.S.

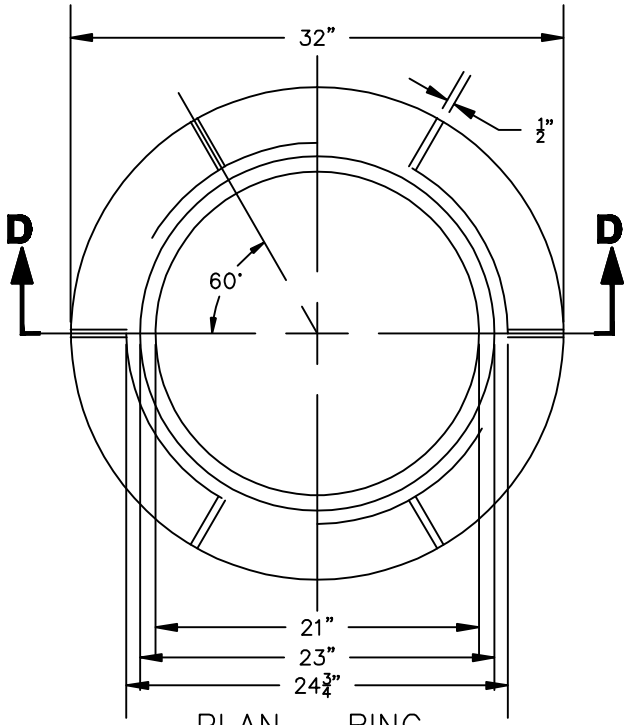

PLAN – RING
N.T.S.

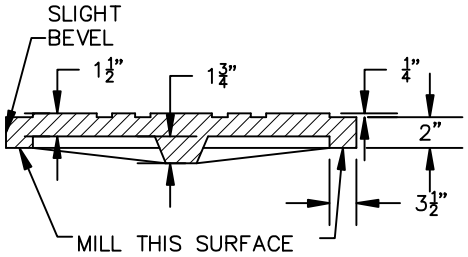

SECTION A–A
N.T.S.

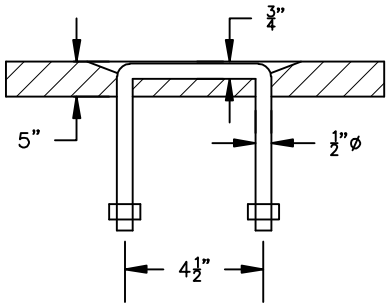

SECTION B–B
N.T.S.

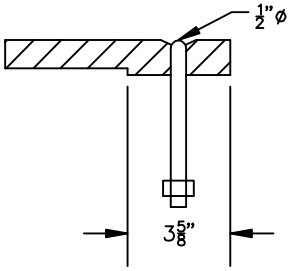

SECTION C–C
N.T.S.

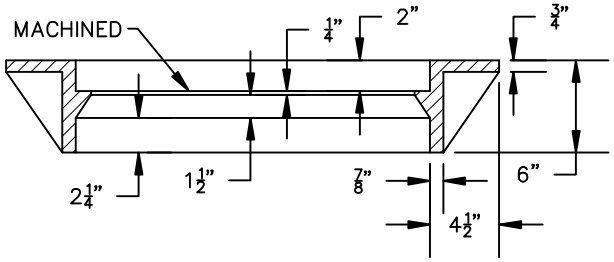

SECTION D–D
N.T.S.

REVISIONS

NO.	DATE	DESCRIPTION
1	8/08	CORRECT TYPO

YORK COUNTY ENGINEERING STANDARDS	MANHOLE RING AND COVER CAST IRON	STD. NO. 12.08 DATE 10/06