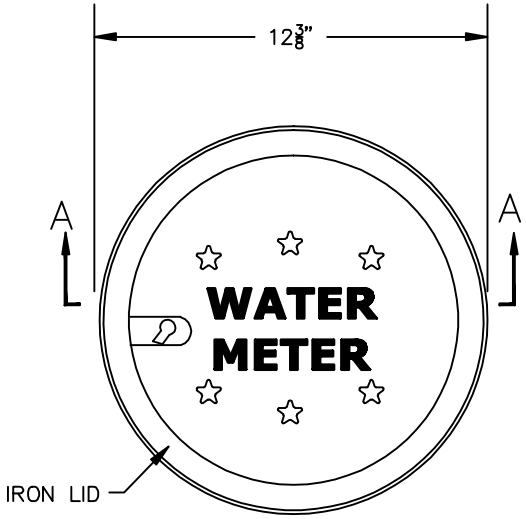

PLAN VIEW
N.T.S.

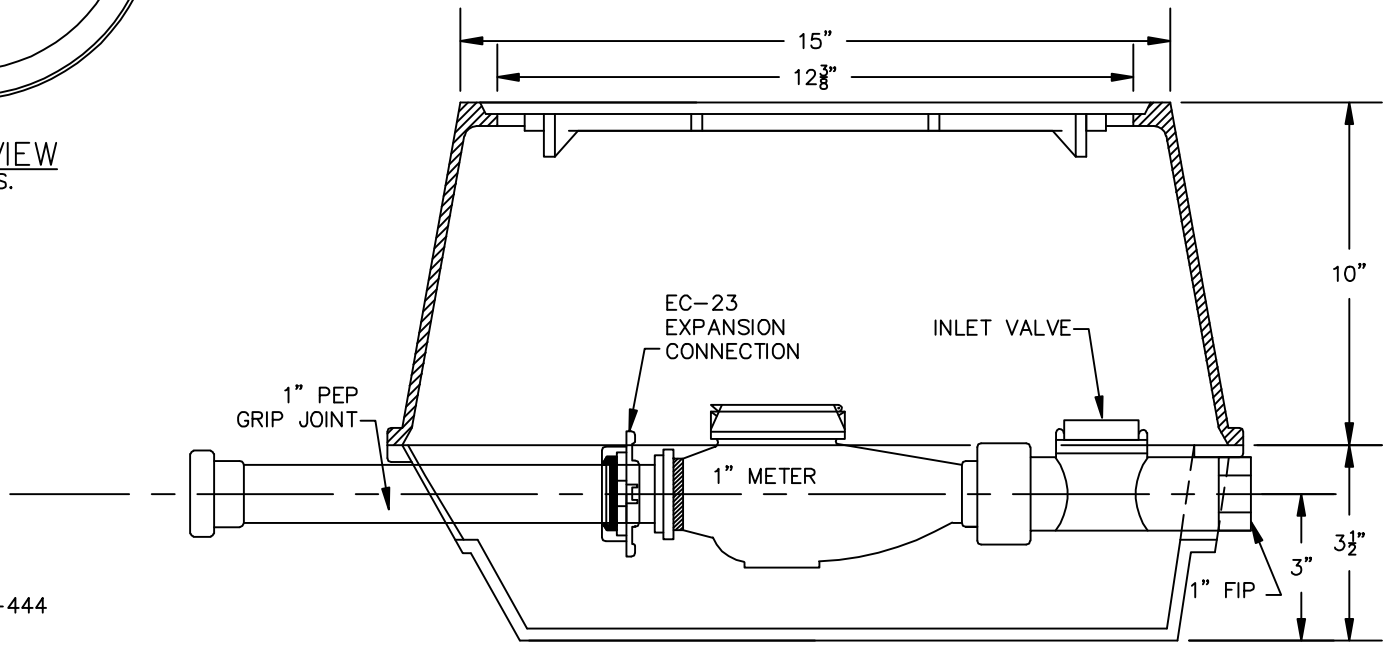

SECTION A-A
N.T.S.

NOTE:
METER BOX SHALL BE: FORD® #YL-111-444
OR APPROVED EQUAL.

REVISIONS

NO.	DATE	DESCRIPTION

YORK COUNTY ENGINEERING STANDARDS	WATER METER BOX 1"	STD. NO. 11.16 DATE 09/06