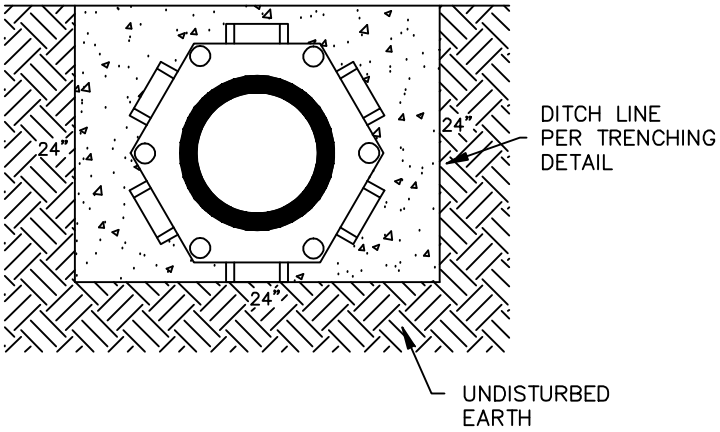

SECTION A–A
N.T.S.

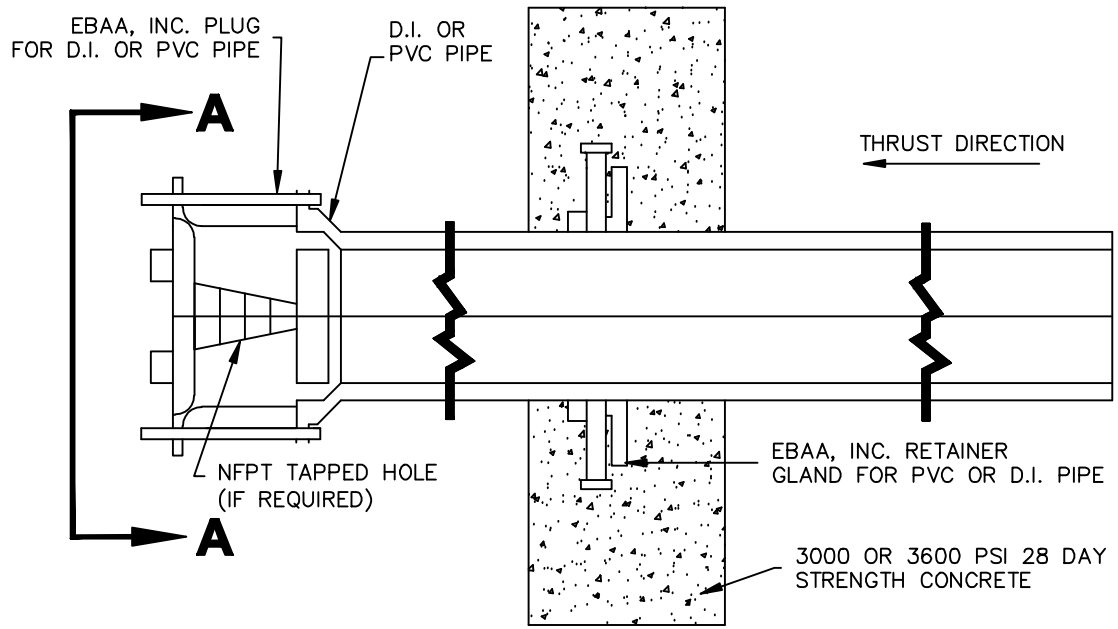

PLAN VIEW
N.T.S.

REVISIONS

NO.	DATE	DESCRIPTION

YORK COUNTY ENGINEERING STANDARDS	STUB–OUT STANDARD DETAIL	STD. NO. 11.14 DATE 09/06