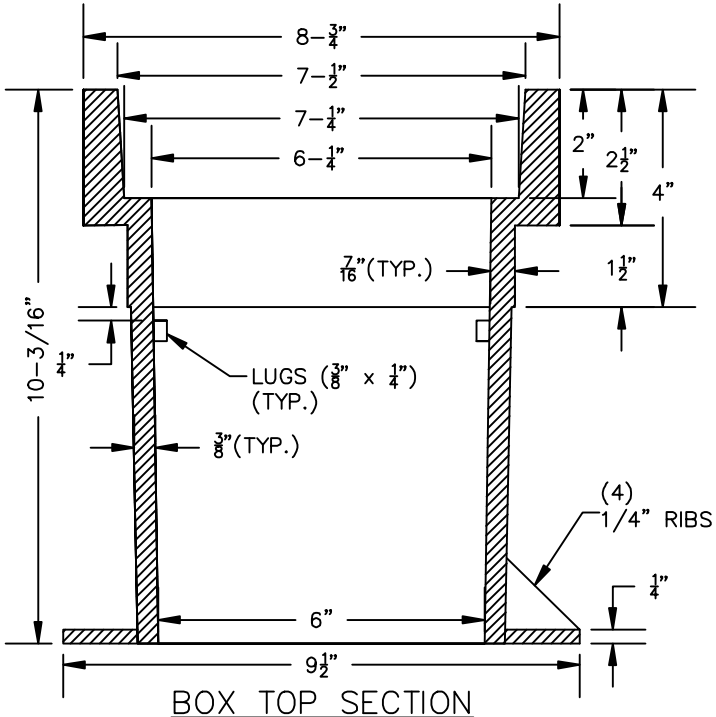

BOX TOP SECTION
N.T.S.

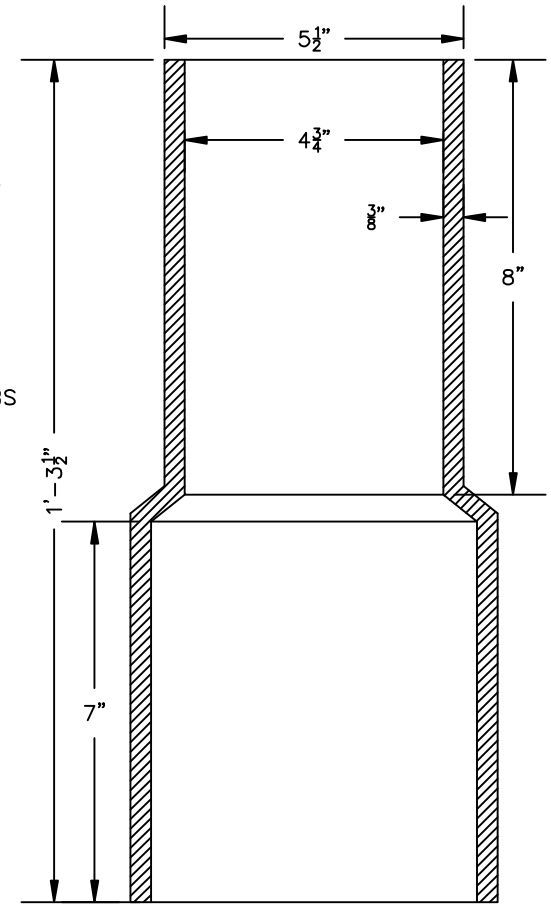

BOX BOTTOM SECTION
N.T.S.

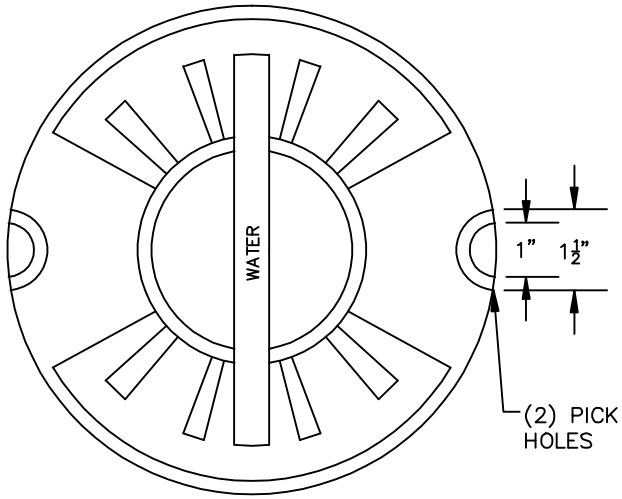

COVER – PLAN VIEW
N.T.S.

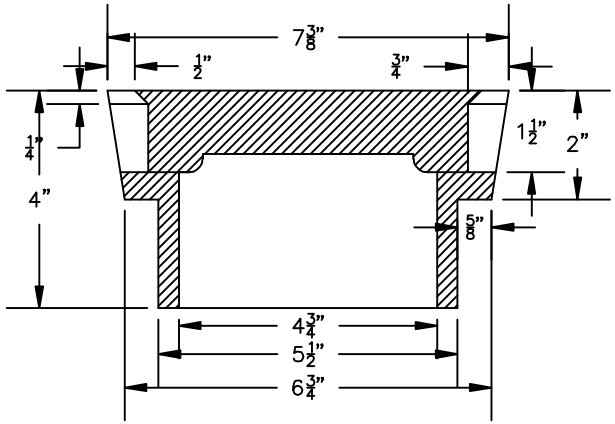

COVER – SECTION VIEW
N.T.S.

REVISIONS

NO.	DATE	DESCRIPTION

YORK COUNTY ENGINEERING STANDARDS

WATER VALVE BOX

STANDARD DETAIL

STD. NO.
11.02
DATE
09/06